Flexit air handling units UNI 2, 3 og 4



– energy efficient ventilation for a healthy indoor environment

FLEXIT FOR A HEALTHY INDOOR ENVIRONMENT

Energy-efficient ventilation

Flexit UNI 2, 3 and 4

The air handling units are well suited for both villas and apartments and meet the requirements for passive houses. The emphasis is very much on energy efficiency, quietness, ease of use and design.

Flexit UNI 2, 3 and 4 with the control panels CI 60 and CI 600.

New control system

Control unit and control panels CI 60 / CI 600 are also brand new. Importance has been attached to contemporary design, easy of use and controlling ventilation to suit requirements.

Save on building costs!

The UNI units are very efficient with a low SFP *). This allows redistribution within the energy limits, making it possible to reduce the thickness of insulation or choose windows with a higher U-value, for example. The total cost of the building can be reduced by opting for the UNI 2, 3 and 4.

It can solve "problem houses"

The UNI's good energy values can solve some problem houses. In houses with extra large windows or other challenges when it comes to energy requirements it is possible to stay within the overall energy limits and have the building approved by using the UNI 2, 3 and 4.

Right up to Passive House standard

It goes without saying that the UNI air handling units have been developed to meet the requirements of the latest regulations. They also meets the Passive House standard. The Passive House standard sets minimum thermal efficiency requirements for heat recovery systems in excess of 80%, nominally 82% or above, and a specific fan power (SFP) of less than 1.5 for ventilation systems. Satisfying these requirements will give the house owner a highly energy-efficient ventilation system that satisfies the standards of the future today.

*) The SFP (Specific Fan Power - kw/m³/s) is an expression of the energy required by the fans in the unit to transport air.

High performance in every key area

The regulations set efficiency and SFP requirements with a view to limiting energy consumption in buildings. The UNI 2, 3 and 4 offer high performance in every key area and have been optimised to deliver clean, fresh air with high heat recovery and low energy consumption - in the same time they're quiet.

Low SFP

A good SFP requires not only an efficient motor, but also an efficient impeller and optimal fitting in the fan casing and unit. The result is low energy consumption and therefore a low SFP. Flexit has used new technology for the impeller and casing/fitting to ensure an optimum outcome and superior SFP. (SFP less than 1.5)

Flexit UNI 3

High efficiency – low pressure drop

The UNI unit's have been optimised for energy saving. The geometry and flow of the rotor solution provide the highest possible efficiency and lowest possible pressure drop, resulting in turn in a better SFP. Efficiency well in excess of 80% offers good opportunities for redistribution in energy calculations. The rotor motor has low energy consumption – 3 watt.

Quiet

Virtually noiseless fans, optimal air flow design inside the unit and good soundproofing mean that the unit is extremely quiet. The result is low radiated noise in the room where the unit is located and low noise in bedrooms and living rooms. The suspension rail with its damper reduces the transmission of structural noise to the wall. All these factors combined mean that noise levels are well within requirements.

Requirement-controlled ventilation

In addition to high efficiency and low SFP, energy-efficient ventilation is also about supplying the right amount of air at the right time.
A number of control options make it possible to automate ventilation, ensuring a good indoor environment and low energy consumption.

Serviceability

The unit has quick links for fans and rotor module so that service should be easy to perform.

Clean, fresh air

Fine filters for both intake and exhaust remove contaminants from the outdoor air and protect the rotor from contamination. Separate filter cassettes make changing filters a simple matter.

Efficient and reliable in the cold too

The rotor technology offers high efficiency even in the cold, which in turn ensures high annual efficiency. The UNI series are well insulated and have been tested in severe cold in SINTEF's cold laboratory.

Patent pending on rotor system

Flexit UNI 2, 3 and 4
– user friendliness and quality given priority

Balanced ventilation has become standard in new homes. This means that installation has to be made as simple and safe as possible. New users want products to be simple to operate. The cold Nordic climate makes tough demands with regard to operation and functioning in the cold. The UNI 2, 3 and 4 have been developed to satisfy all these requirements, guaranteeing occupants clean, fresh air in an energy-efficient way – all year round.

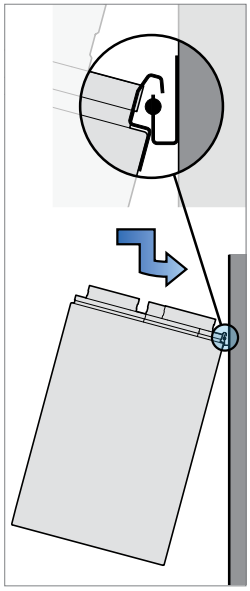

Easy to install

The suspension rail for wall mounting has a rubber damper, which reduces the transmission of structural noise to the wall.

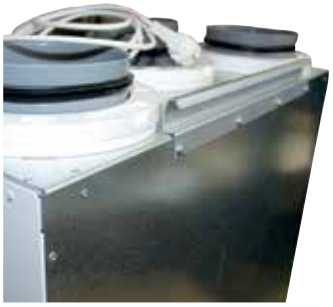

Flexit UNI 3. Details may differ on other models.

Smart opening mechanism

The door has an ingenious closing mechanism. The door opens in a single movement. The door hinge at the bottom of the unit makes the door easy to swing out and remove when necessary.

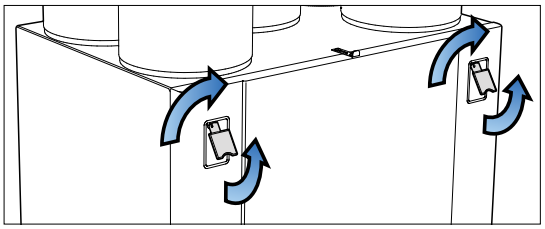

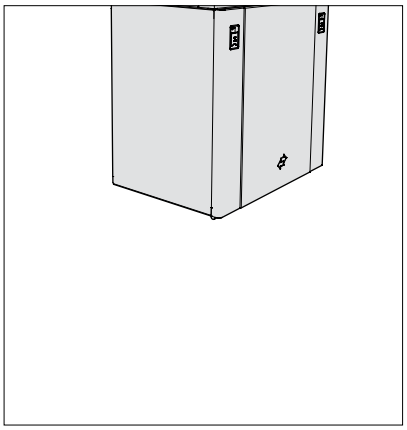

External connection of kitchen hood

UNI 2, 3 and 4 can be connected to an external kitchen hood. A separate duct connection that comes as standard on the unit is used for the external kitchen hood. During cooking the extract air from the kitchen hood bypasses the rotary wheel heat exchanger. The kitchen hood is supplied separately and installed on site. There is a choice of designer hoods, slimline models, built-in hoods and cabinet models.

The grease filter in the kitchen hood absorbs grease and food odours from cooking. The grease filter has to be cleaned regularly and can be put in the dishwasher.

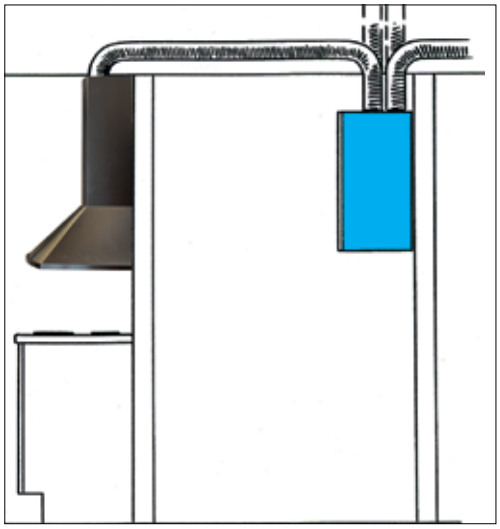

Protection against condensation

To avoid the formation of condensation, it is particularly important for the outdoor and exhaust air ducts to have insulation and a plastic sleeve all the way down to the unit. The duct insulation should be taken right down to the polystyrene around the nipple and secured with the ties provided.

Easy-to-change filters

The units have filters (F7) with a high filter grade for supply air and extract air to ensure that the air entering the building is clean. The filters also ensure that the unit stays clean.
Regular filter changes and fan cleaning is necessary and will ensure that the air handling unit works optimally. Read more on www.flexit.com

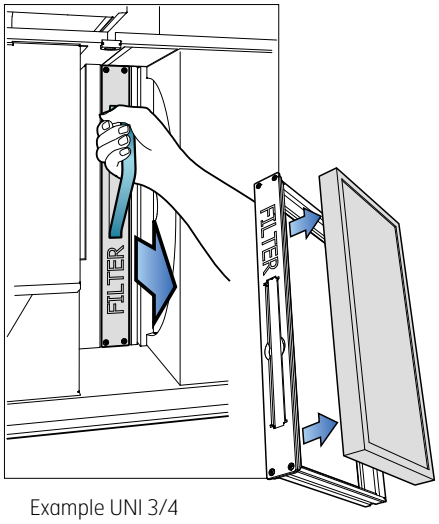

Example UNI 3/4

Attic installation, UNI 4

The back door on UNI 4 can be removed so the unit depths do not exceed the minimum width for the attic stairs (484 mm).

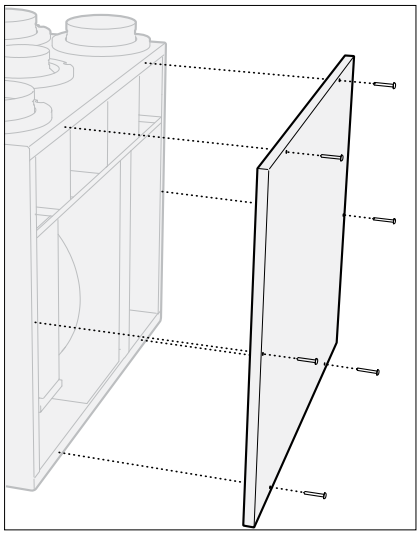

Connection options

The Flexit UNI 3 and UNI 4 are universal, flexible units with several connection options for ducts. The units can be installed on the wall or floor – horizontally or sideways. They can be located in a cold zone such as the loft. A separate kitchen hood can be connected.

1. On the wall. Here we use the enclosed wall bracket. Duct cover is available as accessory.
2. On the floor (lying on back). Recommended to use absorption feet (available as accessories).
3. The ceiling (UNI 2). Installation is done directly in the ceiling, without wall bracket.

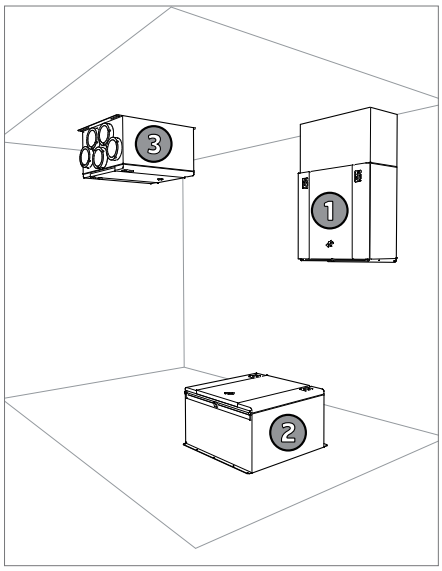

Flexible duct connetion

Duct connections for outdoor air and extract air, if preferred, be moved to the bottom of the unit by exchanging the nipples and covers (UNI 3/4).

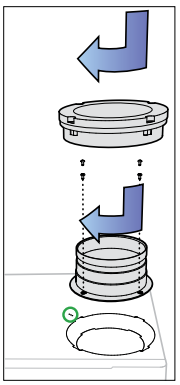

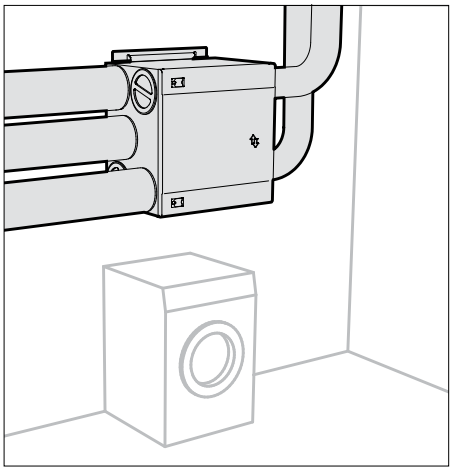

Sideways installation

The unit can be installed sideways on. In this case the door opens on a side hinge (UNI 3/4). Showed with duct cover in the bottom of the unit.

Requirement-controlled ventilation

In addition to high efficiency and low SFP, energy-efficient ventilation is also about supplying the right amount of air at the right time. Flexit's new automatic control system has been developed to make it easier to operate the user interface correctly. It is also possible to use a number of control options such as timer, CO_2, pressure, humidity and the presence of people to automate ventilation so as to ensure a good indoor environment and low energy consumption.

CO_2 sensor (art.no. 110991) in living room sends a signal to the unit regarding the contamination level in the room. Ventilation is adjusted as required.

Humidity sensor (art.no. 110987) in both bathroom and wet room sends a signal to the unit regarding the humidity level in the room. Ventilation is adjusted as required.

Wireless control panel (art.no.113243) for forcing (max) ventilation. It can be positioned near the bathroom for accessibility. Simple retrofitting without laying cables.

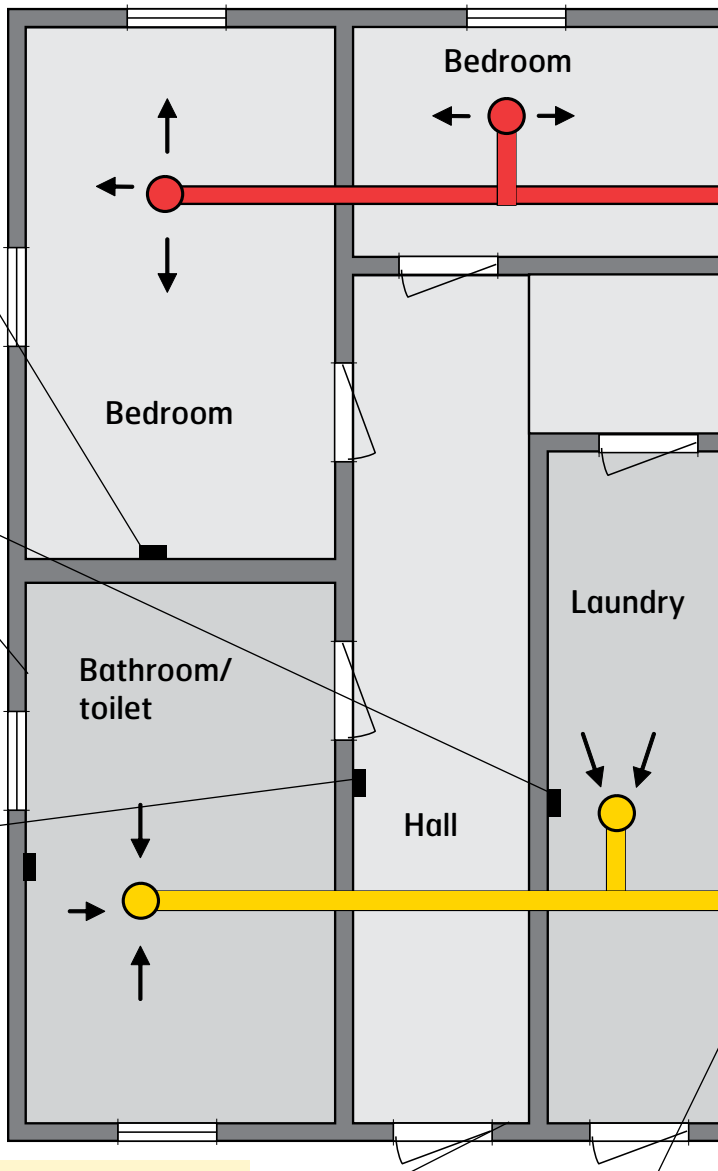

CI 60 control panel (art.no. 09410) or **CI 600** (art.no. 09415) (advanced) in a separate location in the dwelling for simple control and monitoring of the ventilation system.

Air handling units in a separate room. It is equipped with low-energy fans, a high-efficiency rotor recovery system and fine filters. The control system regulates ventilation as required.

– the right amount of air at the right time

Current regulations allow ventilation to be reduced when a dwelling is not in use and the automatic control system has been set up to make this simple. The UNI 2, 3 and 4 can also have kitchen ventilation going into the exhaust air duct or increase the supply of fresh air if a separate kitchen hood with a motor is used. This contributes to balanced ventilation, which is necessary in the well-sealed houses of today if kitchen extraction is to work properly.

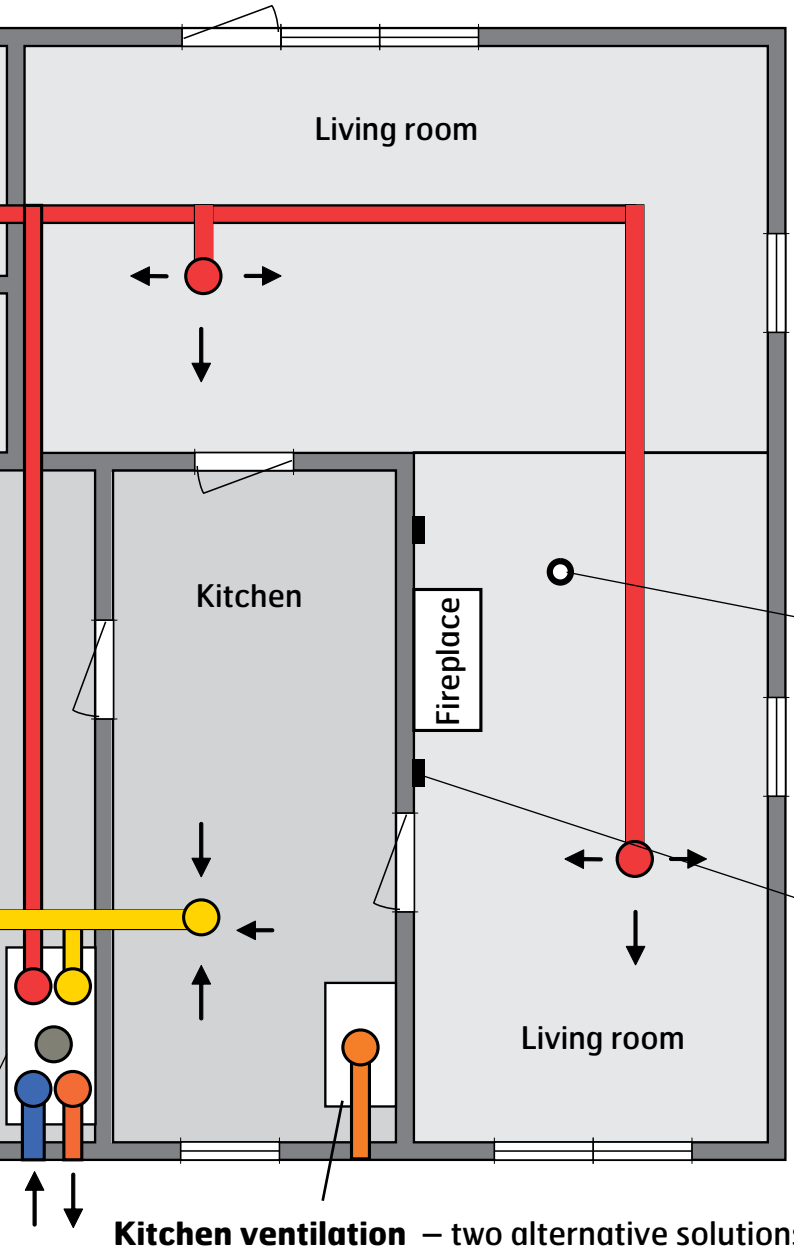

Key to the colour codes used in the ventilation system:

- Extract air. Contaminated air is removed from wet rooms, bathrooms and toilets.
- Supply air. Filtered, conditioned air is supplied to bedrooms and living rooms.
- Exhaust air. Contaminated air is expelled from the house.
- Outdoor air. Clean, fresh air is drawn in from outside.

Requirement-controlled ventilation – the right amount of air at the right time
Requirement-controlled ventilation means that ventilation in the building can be controlled in such a way that the needs of the occupants are properly catered for and the building is ventilated well enough to prevent possible damage.

Motion sensor
(art.no. 09390) in living room sends a signal to the unit to increase ventilation to max setting.

Fireplace
A fireplace requires an adequate air supply to ensure a good updraught and prevent smoke from coming into the room. Wireless control panel (art.no. 113243) for in-creasing the air supply if a fireplace is used. It can be positioned near the fireplace for accessibility. Simple retrofitting without laying cables.

Kitchen ventilation – two alternative solutions

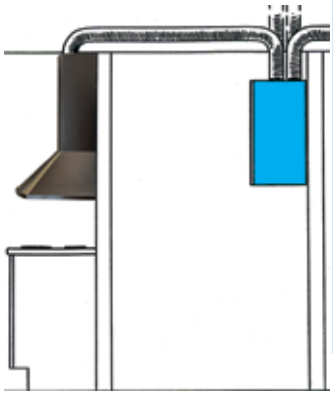

1. Unit connected to external kitchen hood.
During cooking the extract air from the kitchen hood bypasses the rotary wheel heat exchanger. The unit comes with a separate duct connection for a kitchen hood as standard.

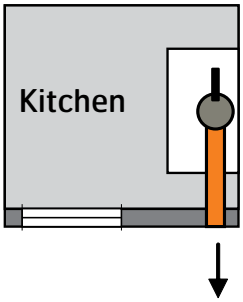

2. Kitchen fan with direct exhaust out of the building.
Wireless pressure guard (art.no. 113242) can be located in exhaust from kitchen hood. If the pressure changes when the damper is adjusted, the pressure sensor sends a signal to the unit to adjust the air supply.
Pressure guard for kitchen duct with cable (art no 111410).

Control panels

Contemporary design, ease of use and automatic adjustment

With our new control system the ventilation system can be controlled automatically or the system can be adjusted directly. There are two new control panels to choose from. The new panels are in an attractive design with user-friendly operation, backlit buttons and indicators that show the settings, whether a service is needed and alarms clearly. The control panels are in black plastic with a high-gloss piano finish. The panel is attractive with easy-to-understand buttons and indicators.

Flexit CI 60

The CI 60 control panel has all the necessary control functions. It is possible to adjust and control speed and temperature on the panel. The panel gives a signal if there is a fault in the unit or the filter needs changing. The panel is the right size to fit a single wall box and comes with a low-voltage cable for connection to the unit. Several panels can be connected if ventilation needs to be controlled from several places in the dwelling.

The air handling unit is adjusted on the control panel.
The picture shows the control panel open.

Flexit CI 600

The Flexit CI 600 has lots of extra refinements and control options. In addition to the standard functions on the CI 60, the CI 600 has the following features:

- Timer function.
- Cooling control.
- Extract air control.
- Option of communication by Modbus.
- High-resolution colour display with text and symbols.

The panel displays indoor and outdoor air temperature. Functions and alarms appear on the display with help messages. The panel is the right size to fit a single wall box and comes with a low-voltage cable for connection to the unit. If ventilation needs to be controlled from several places in the dwelling, a CI 60 panel and wireless forcing switch can be used.

The panel displays:
- Time and date
- Outdoor air temperature
- Room temperature
- Current speed of ventilation unit
- Daily/weekly timer active
- Additional heating activated/ deactivated

Advanced control and monitoring – Modbus

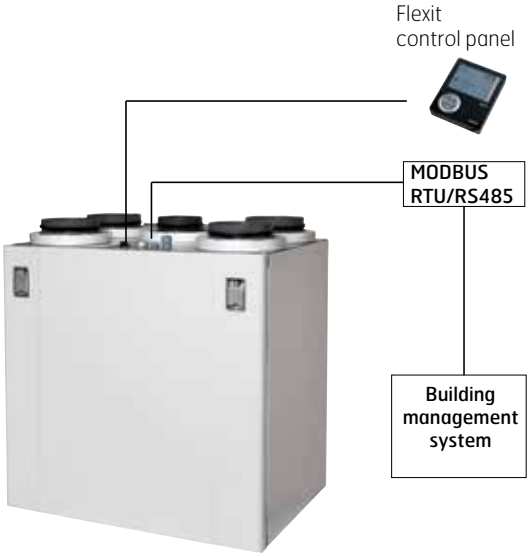

Advantages with Modbus
- Remote control
- Monitoring
- Receive alarm
- Increased operational
- Demand control ventilation
- Quick and effective service

What is Modbus?

An accessory that allows the air handling unit can be controlled and monitored from a superior system. The superior system can be a system for houses and apartments that pairing control of ventilation with heat and lighting. This provides opportunities to integrate various systems that need control the number of cases. Example can be Home / Away function.
Communicates through standard MODBUS RTU/RS-485 to the superior system.

Product description

Flexit UNI 2, 3 and 4, the air handling units with high efficiency rotary heat exchanger. The products are designed to be installed in technical rooms, washrooms, storage rooms, lofts or other suitable spaces. The units can be mounted vertical, horizontal or sideways and can be connected to the kitchen hood. Suitable for both new and existing homes and small offices. The units come with EC fans and are equipped with two F7 compact filters.
UNI 2, 3 and UNI 4 controlled via the control panels CI 60 or CI 600.

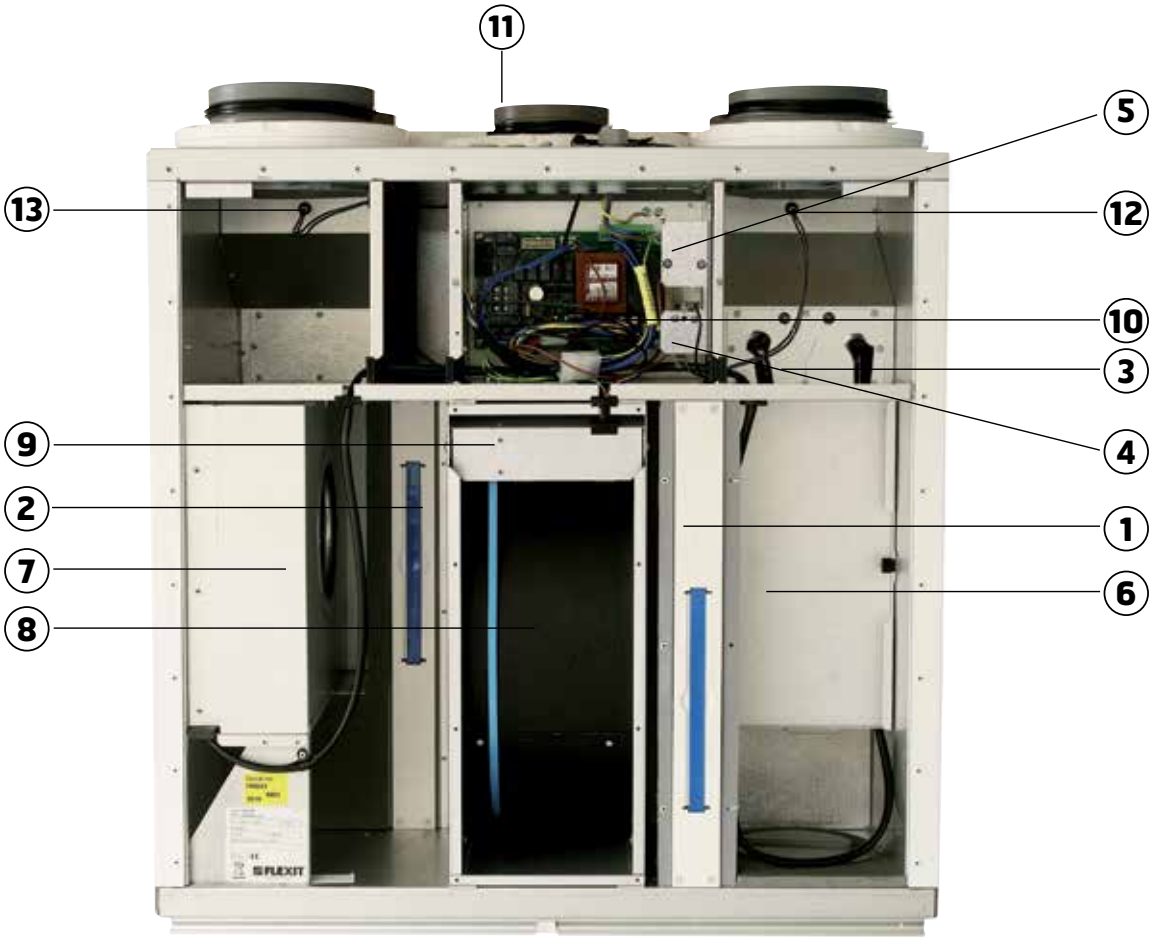

General picture shows UNI 3 as left model with heating element
Go to www.flexit.com for other models.

1 (FI2)	Extract air filter F7
2 (FI1)	Supply air filter F7
3 (EB1)	Heating element
4 (F10)	Overheating thermostat (manual reset)
5 (F20)	Overheating thermostat (automatic reset)
6 (M1)	Supply air fan
7 (M2)	Extract air fan
8 (HR-R)	Heating rotor recovery system
9 (M4)	Rotor motor
10	Control board
11	Connection for external kitchen hood
12	Temperature sensor, supply air
13	Temperature sensor, outdoor air

Flexit SPIRIT UNI 2

Art.no.	Type	
700084	UNI 2 RER EC	right model, EC-fan, with el.element
700085	UNI 2 REL EC	left model, EC-fan, with el.element
700086	UNI 2 R R EC	right model, EC-fan, without el.element
700087	UNI 2 R L EC	left model, EC-fan, without el.element

Flexit SPIRIT UNI 3

Art.no.	Type	
700040	UNI 3 RER EC	right model, EC-fan, with el.element
700041	UNI 3 REL EC	left model, EC-fan, with el.element
700042	UNI 3 R R EC	right model, EC-fan, without element
700043	UNI 3 R L EC	left model, EC-fan, without element

Flexit SPIRIT UNI 4

Art.no.	Type	
700060	UNI 4 RER EC	right model, EC-fan, with el.element
700061	UNI 4 REL EC	left model, EC-fan, with el.element
700062	UNI 4 R R EC	right model, EC-fan, without element
700063	UNI 4 R L EC	left model, EC-fan, without element

Control panels

Art.no.	Type
09410	CI 60 Control panel
09415	CI 600 Control panel with timer function

CI 60

CI 600

Kitchen hoods for external connection

Art.no.	Model
110604	**Vision-E/F, 60cm**
110603	**Vision-E/F, 90 cm**
110607	**Elegant-E/F, 60 cm steel**
110608	**Elegant-E/F, 60 cm black**
110609	**Elegant-E/F, 60 cm white**
13750	**Brasserie-E, white**
13751	**Brasserie-E, steel**
13626	**Bistro-E**
13616	**Fondue-E**

Vision-E/F

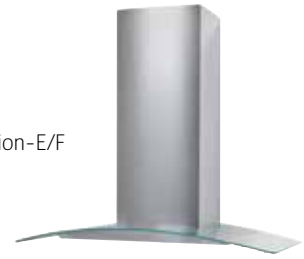

Elegant-E/F

Brasserie-E, white

Fondue-E

Brasserie-E, steel

Bistro-E

Accessories

Art.no.	Type	UNI 2	UNI 3	UNI 4
111738	Filter set complete	✓		
110716	Filter set complete		✓	
110898	Filtersett komplett			✓
09410	CI 60 Control panel	✓	✓	✓
09415	CI 600 Control panel with timer function	✓	✓	✓
113243	Forcing switch, wireless	✓	✓	✓
113244	Extra forcing switch	✓	✓	✓
09390	SP 450 Motion detector	✓	✓	✓
113242	Pressure guard for kitchen duct, wireless	✓	✓	✓
111410	Pressure guard for kitchen duct, w/cable	✓	✓	✓
111156	Temperature sensor, NTC	✓	✓	✓
110987	Humidity sensor	✓	✓	✓
110991	CO2-sensor	✓	✓	✓
09861	Smoke detector	✓	✓	✓
111647	Modbus-adapter	✓	✓	✓
111756	Electrical element, complete	✓		
110861	Electrical element, complete		✓	
110862	Electrical element, complete			✓
111805	Water coil Ø125 komplett	✓		
112667	Water coil Ø160 Type A complete		✓	✓
112668	Water coil Ø160 Type B complete		✓	✓
112669	Water coil Ø160 Type C complete		✓	✓
112670	Water coil Ø200 Type A complete		✓	✓
112671	Water coil Ø200 Type B complete		✓	✓
56596	Motor shunt, 230V	✓	✓	✓
111801	Closing air damper w/spring Ø125	✓		
14482	Closing air damper w/spring Ø160		✓	✓
14481	Closing air damper w/spring Ø200		✓	✓
14485	Closing air damper w/spring Ø250			✓
110939	2-way Valve, KVS 0,25	✓	✓	✓
110940	2-way Valve, KVS 0,4	✓	✓	✓
111812	2-way Valve, KVS 0,63	✓	✓	✓
111814	2-way Valve, KVS 1,0	✓	✓	✓
110941	3-way Valve, KVS 0,25	✓	✓	✓
110942	3-way Valve, KVS 0,4	✓	✓	✓
111813	3-way Valve, KVS 0,63	✓	✓	✓
111815	3-way Valve, KVS 1,0	✓	✓	✓
111823	Duct cover, UNI 2, height 32,7cm	✓		
110956	Duct cover, UNI 3, height 33,5cm		✓	
111135	Duct cover, UNI 4, height 34,5cm			✓
110955	Absorption feet for floor mounting (4 pcs.)	✓	✓	✓


Filter set UNI 2


Filter set UNI 3 and UNI 4


Control panel CI 60


Control panel CI 600


Forcing switch


Motion detector


Pressure guard


Temperature sensor


Humidity sensor


CO2-sensor


Smoke detector


El.element


Water coil


Motor shunt


Closing air damper


2 and 3 -way Valve

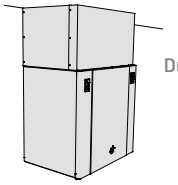
Duct cover


Absorption feet

Technical data

	UNI 2 RE	UNI 2 R	UNI 3 RE	UNI 3 R	UNI 4 RE	UNI 4 R
	with el.element EC-fan	without el.element EC-fan	with el.element EC-fan	without el.element EC-fan	with el.element EC-fan	without el.element EC-fan
Rotated voltage	230v 50 Hz	230v 50 Hz	230v 50 Hz	230v 50 Hz	230v 50 Hz	230v 50 Hz
Fuse	10 A	10 A	10 A	10 A	10 A	10 A
Rated current total	4,4 A	0,9 A	6,16 A	1,4 A	7,2 A	2,1 A
Rated power total	1015 W	215 W	1416 W	216 W	1655 W	355 W
Rated power, el.element	800 W	-	1200 W		1300 W	
Rated power, fans	212 W	212 W	2 x 106 W	2 x 106 W	2 x 175 W	2 x 175 W
Rated power, rotor motor	3 W	3 W	3 W	3 W	3 W	3 W
Fan type	B-wheel	B-wheel	B-wheel	B-wheel	B-wheel	B-wheel
Fan motor control	0-10V	0-10V	0-10V	0-10V	0-10V	0-10V
Fan speed, max rpm	3390 rpm	3390 rpm	3 390rpm	3 390rpm	2 930rpm	2 930rpm
Auto. control standard	CS 60	CS 60	CS60	CS60	CS60	CS60
Filtertype	F7	F7	F7	F7	F7	F7
Filter dimensions (WxHxD)	335x130x113	335x130x113	419x192x31	419x192x31	459x207x31	459x207x31
Weight	45 kg	45 kg	67 kg	67 kg	86 kg	86 kg
Duct connection	Ø 125 mm	Ø 125 mm	Ø 160 mm	Ø 160 mm	Ø 160 mm	Ø 160 mm
Kitchen hood connection	Ø 125 mm	Ø 125 mm	Ø 125 mm	Ø 125 mm	Ø 125 mm	Ø 125 mm
Height	780 mm *)	780 mm *)	700 mm	700 mm	700 mm	700 mm
Width	632 mm	632 mm	720 mm	720 mm	900 mm	900 mm
Depth	408 mm	408 mm	520 mm	520 mm	540 mm	540 mm

* including bracket

Symbols Used

These products have a number of symbols that are used to label the product itself and in the installation and user documentation.

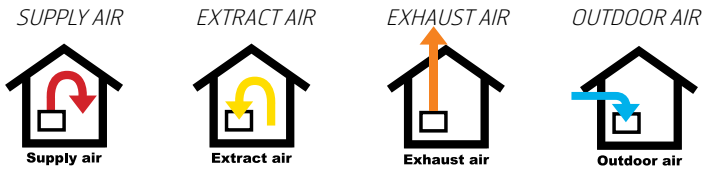

Male connection

UNI 2

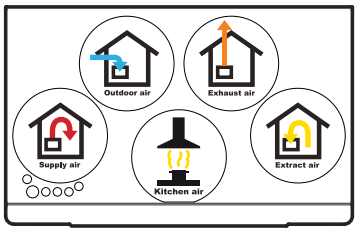

Left model , top

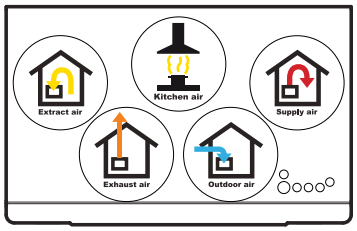

Right model , top

UNI 3 and UNI 4

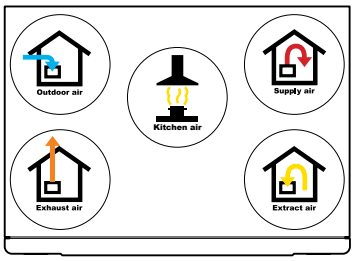

Left model , top

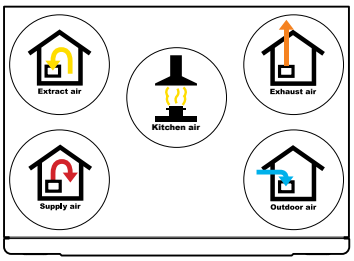

Right model , top

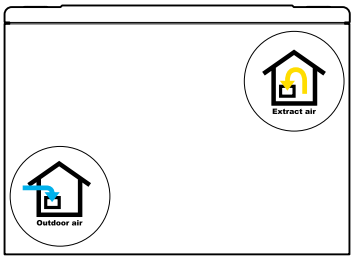

Left model , bottom

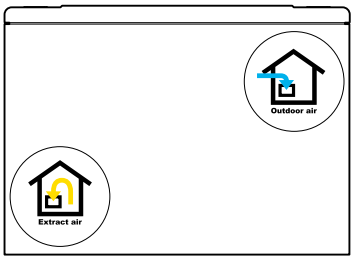

Right model , bottom

Dimensions UNI 2

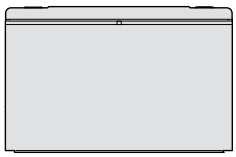

Bottom

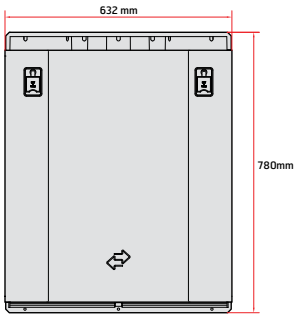

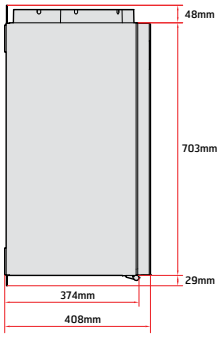

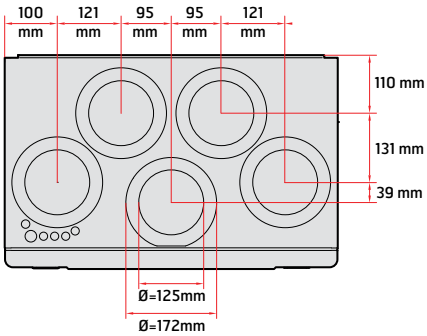

Left model , top

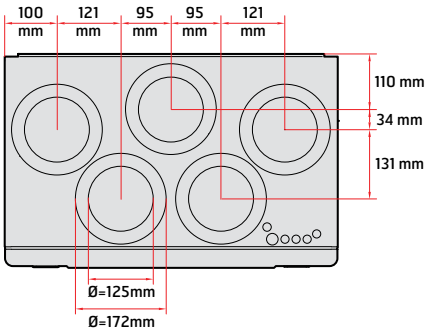

Right model , top

Dimensions UNI 3

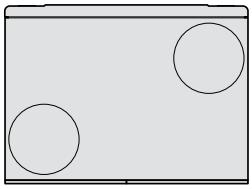

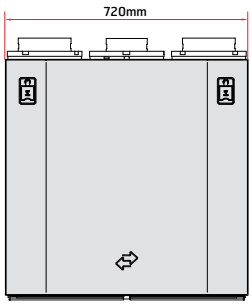

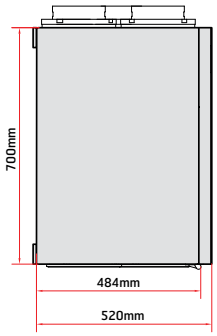

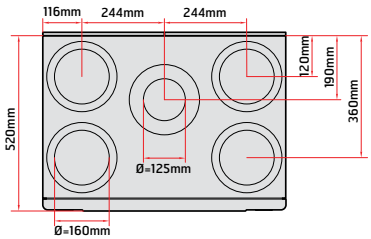

Dimensions UNI 4

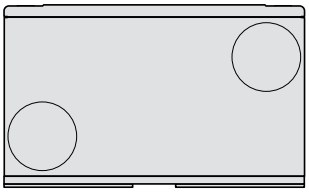

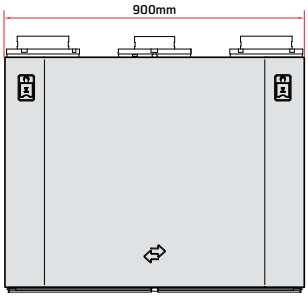

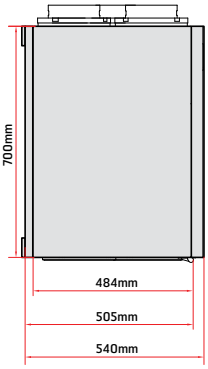

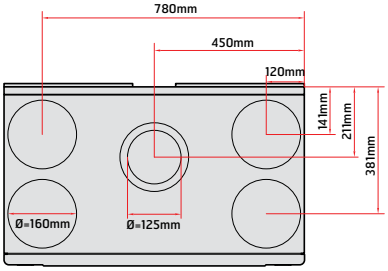

System drawings UNI 2

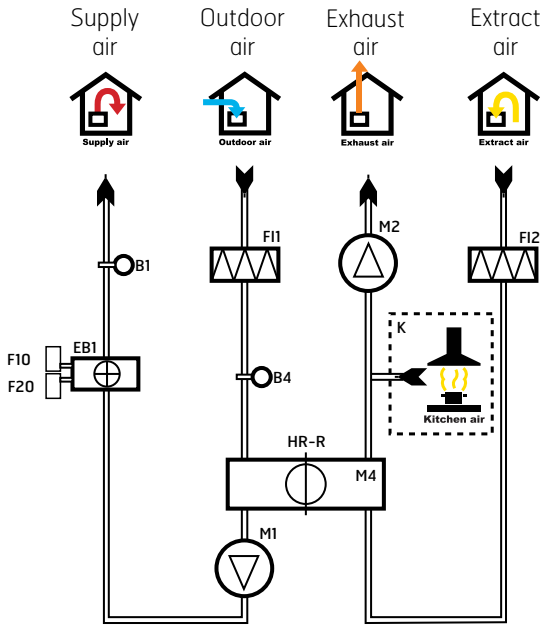

System drawing (with heating element)
(left model

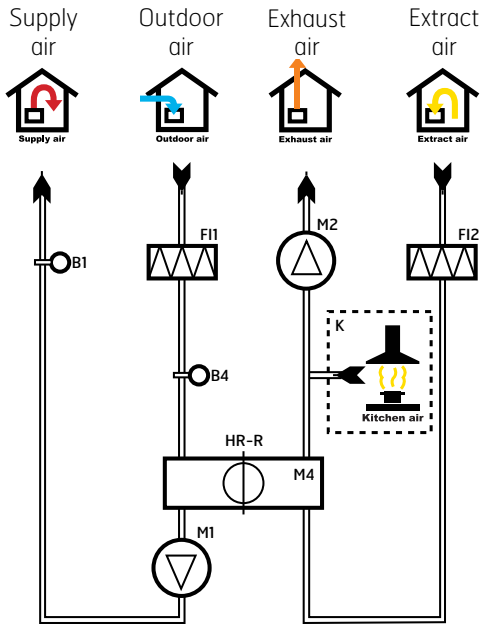

System drawing (without heating element)
(left model)

Systemskisser UNI 3 og UNI 4

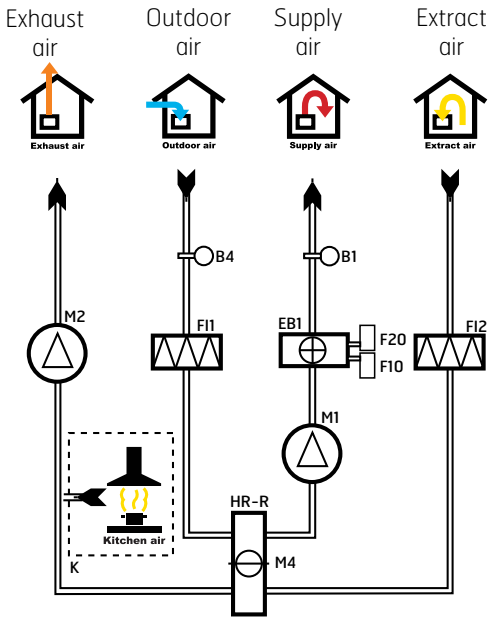

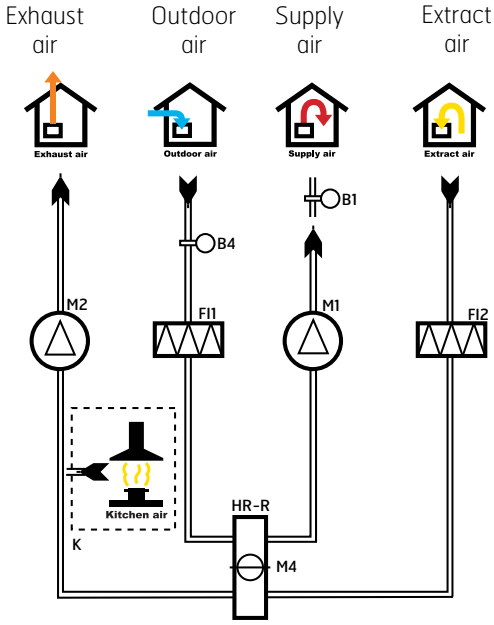

System drawing (with heating element)
(left model)

B1	Temperature sensor, supply air
B4	Temperature sensor, outdoor air
EB1	Heating element
F10	Overheating thermostat, manual reset
F20	Overheating thermostat, automatic reset
FI1	Supply air filter
FI2	Extract air filter
M1	Supply air fan
M2	Extract air fan
HR-R	Heat recovery system
M4	Rotor motor
K	Kitchen hood

System drawing (without heating element)
(left model)

B1	Temperature sensor, supply air
B4	Temperature sensor, outdoor air
FI1	Supply air filter
FI2	Extract air filter
M1	Supply air fan
M2	Extract air fan
HR-R	Heat recovery system
M4	Rotor motor
K	Kitchen hood

Temperature efficiency UNI 2 (according to EN 308)

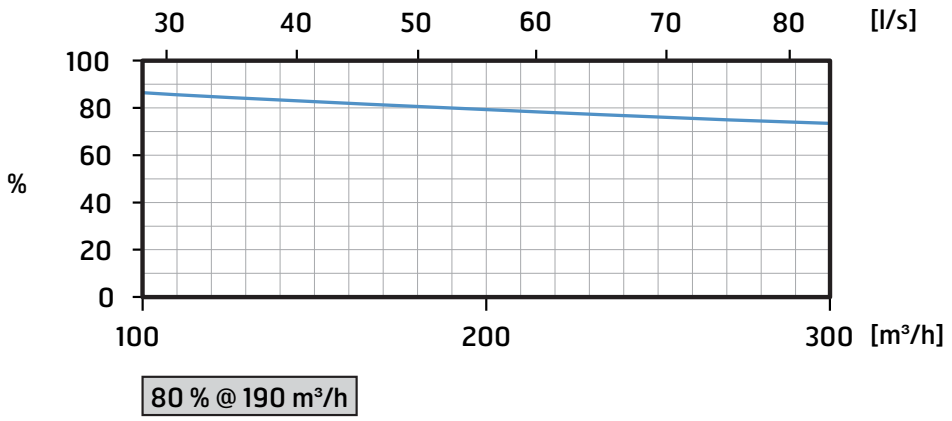

Temperature efficiency UNI 3 (according to EN 308)

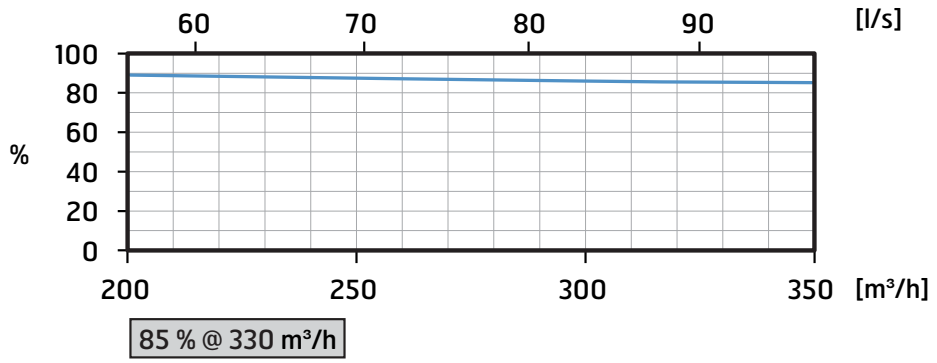

Temperature efficiency UNI 4 (according to EN 308)

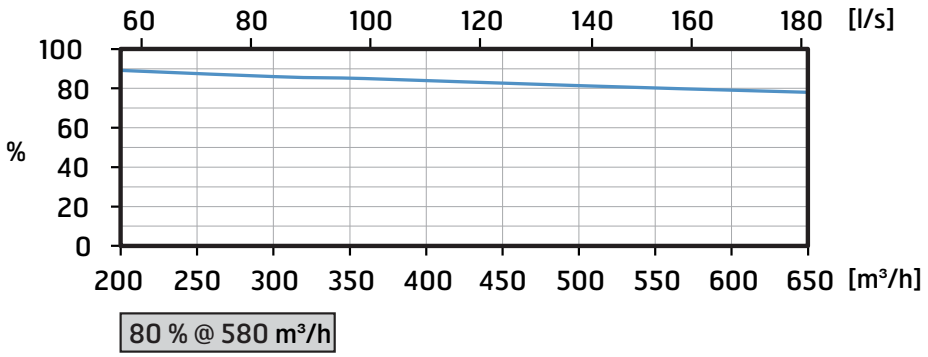

On www.flexit.com it's possible to download FlexitCalculation. This is a calculation program for air handling units that make it easier to find the best unit.

There are dimentioned drawing and 3D-models of the units and all technical values of the products. It can be removed files for use in other applications, eg. MagiCAD.

Capacity and sound data – UNI 2 EC

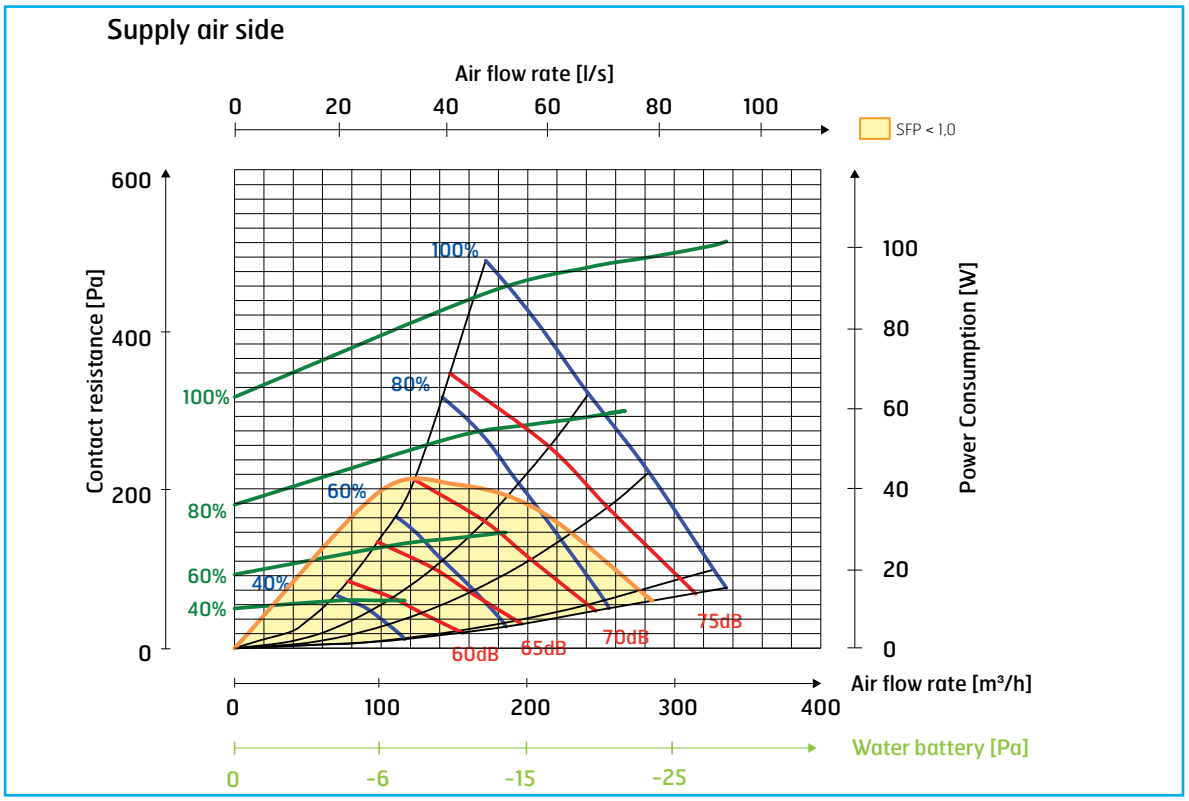

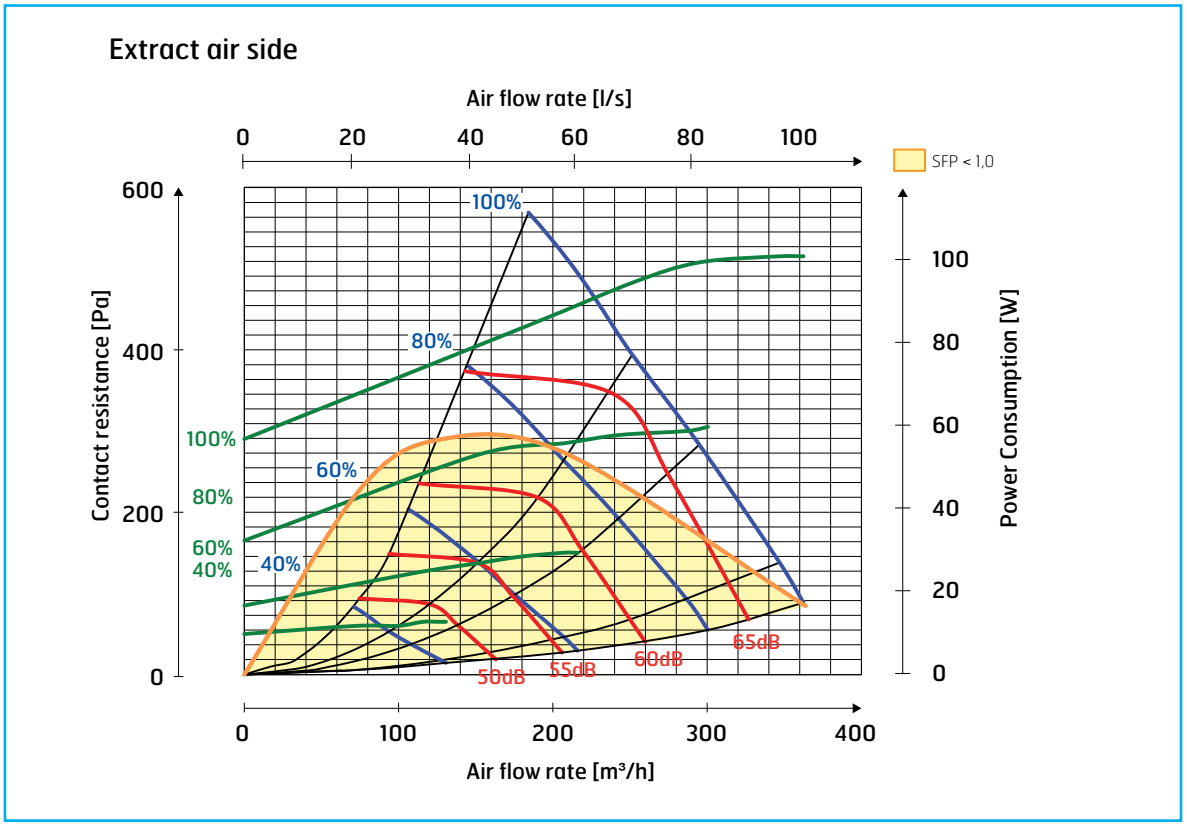

Correction factor for Lw

Hz	*63*	*125*	*250*	*500*	*1000*	*2000*	*4000*	*8000*	*LwA*
Supply air	*1*	*0*	*1*	*0*	*-8*	*-10*	*-20*	*-36*	
Extract air	*6*	*5*	*5*	*-3*	*-14*	*-16*	*-32*	*-46*	
Radiated	*-44*	*-38*	*-35*	*-36*	*-45*	*-44*	*-51*	*-55*	*-36*

Sound data is given at sound power level LwA in the capacity diagrams and is corrected with the table below for the various octave bands.
Radiated noise produces Lw in the various octave bands and total LwA. This is read directly from the supply air table

Capacity and sound data – UNI 3 EC

Supply air side

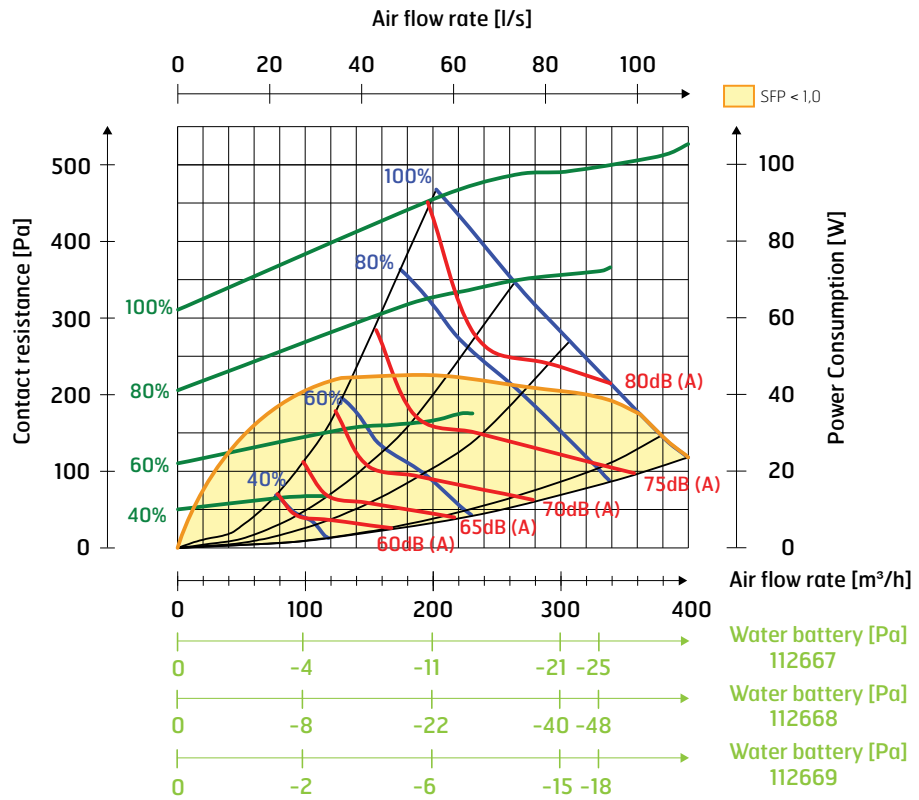

Extract air side

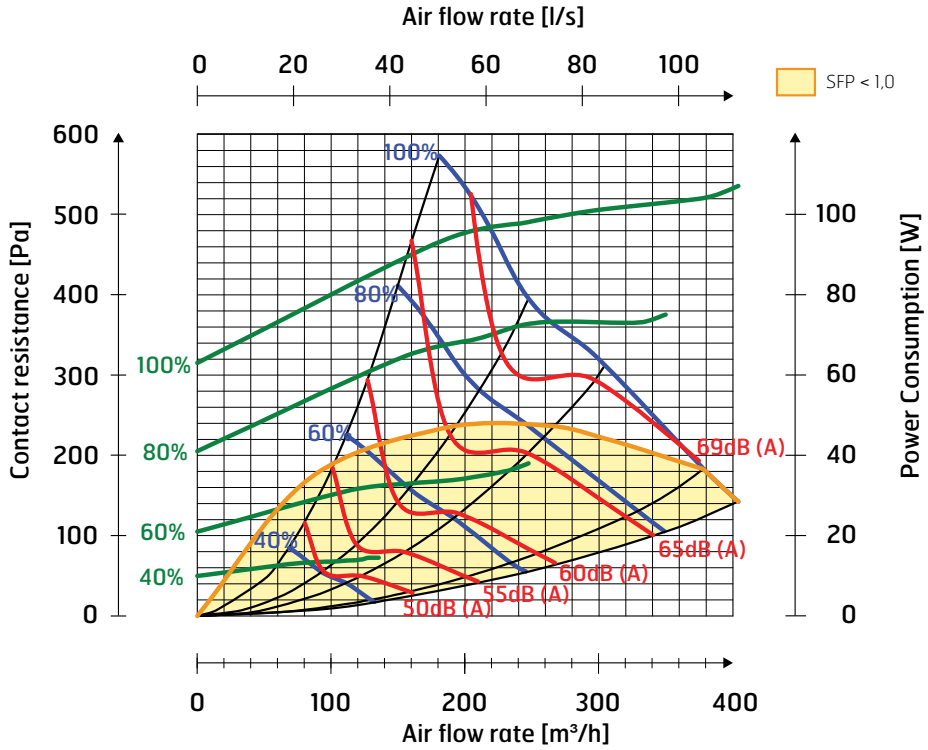

Correction factor for Lw

Hz	*63*	*125*	*250*	*500*	*1000*	*2000*	*4000*	*8000*	*LwA*
Supply air	*1*	*-1*	*3*	*-1*	*-7*	*-11*	*-20*	*-36*	
Extract air	*2*	*0*	*1*	*2*	*-16*	*-21*	*-32*	*-52*	
Radiated	*-50*	*-46*	*-33*	*-39*	*-50*	*-53*	*-60*	*-70*	***-38,6***

Sound data is given at sound power level LwA in the capacity diagrams and is corrected with the table below for the various octave bands.
Radiated noise produces Lw in the various octave bands and total LwA. This is read directly from the supply air table

Capacity and sound data – UNI 4 EC

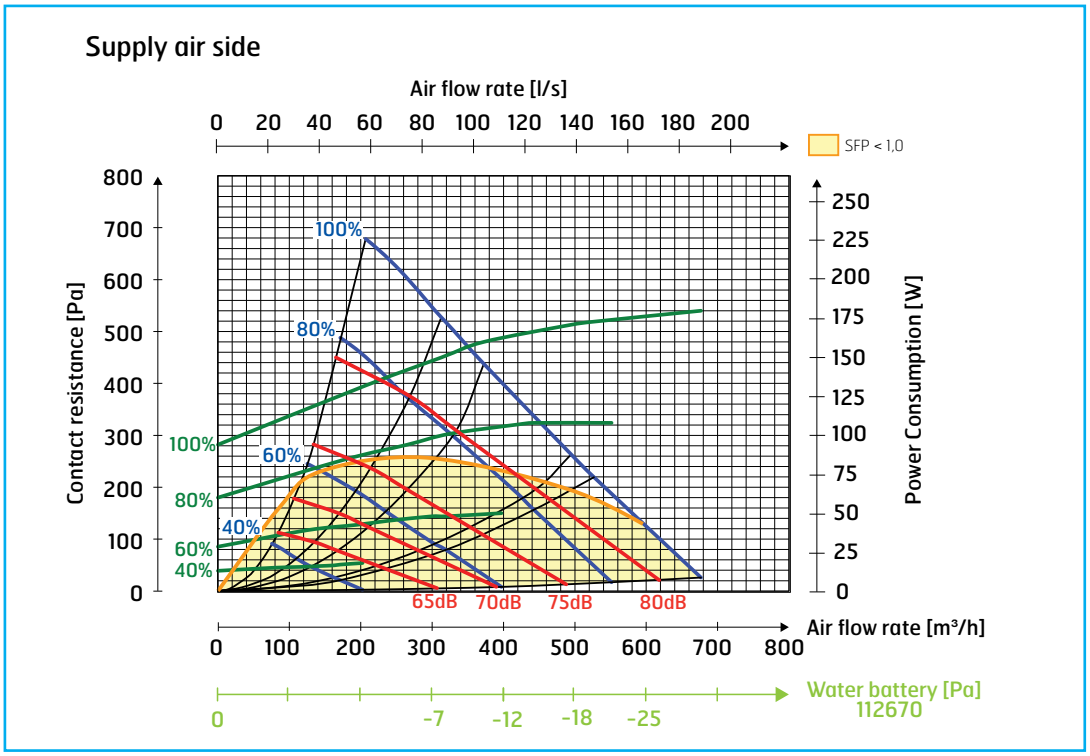

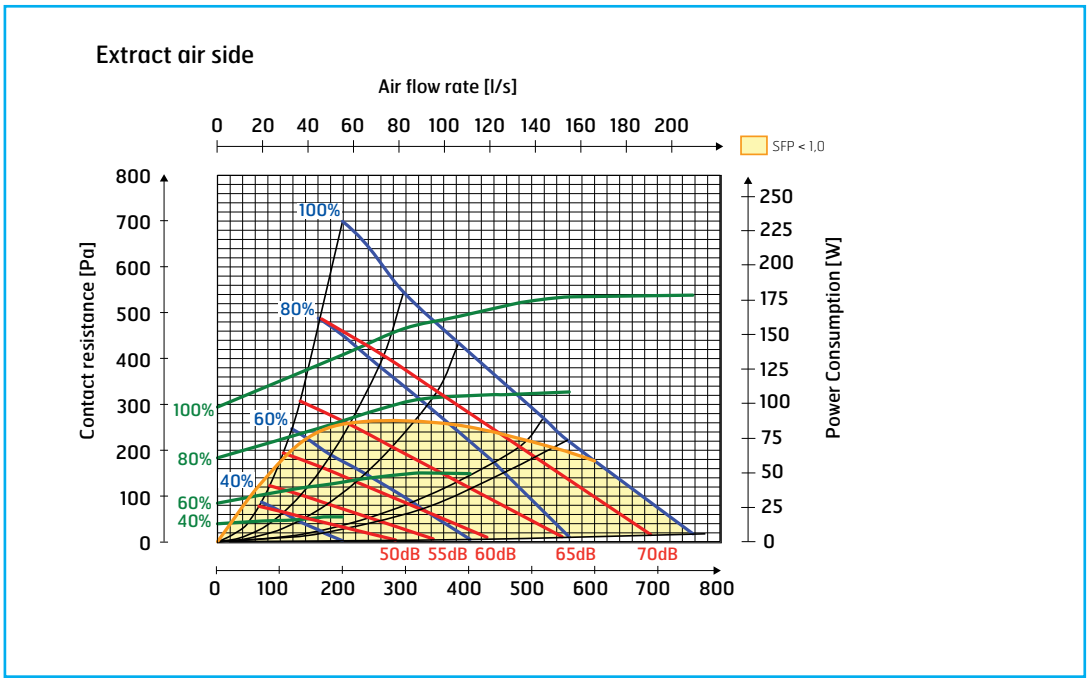

Correction factor for Lw

Hz	*63*	*125*	*250*	*500*	*1000*	*2000*	*4000*	*8000*	*LwA*
Supply air	*4*	*2*	*3*	*-1*	*-8*	*-11*	*-23*	*-37*	
Extract air	*6*	*3*	*2*	*1*	*-11*	*-24*	*-35*	*-52*	
Radiated	*-50*	*-39*	*-27*	*-38*	*-42*	*-45*	*-54*	*-67*	***-33***

Sound data is given at sound power level LwA in the capacity diagrams and is corrected with the table below for the various octave bands.
Radiated noise produces Lw in the various octave bands and total LwA. This is read directly from the supply air table

Flexit – the safe choice!

Flexit specialises in home ventilation and delivers clean, fresh air solutions for a healthy indoor environment. Flexit is the market leader in home ventilation and has been supplying ventilation solutions to Norwegian homes since 1974. Flexit is a Norwegian company. All products are developed specially for the Nordic climate. Products are tested and documented in accordance with the latest standards.

That gives you peace of mind!

The SPIRIT range

– energy efficient ventilation for a healthy indoor environment

Stricter energy requirements in the regulations and the new Passive House Standard demand efficient air handling units, and the SPIRIT range has been developed to meet that need. High targets for energy efficiency, quietness, user friendliness and quality characterise the whole range, and new models will be introduced in the future. All the models are equipped with high-efficiency rotating recovery systems and have low-energy fans. Together with the new control system, this means that the SPIRIT range sets a new standard in home ventilation.

Flexit K2R
It is a combined air handling unit with an integrated kitchen hood. It's specially designed for flats. It has a high-efficiency rotary recovery system and low-energy fans. The unit is very quiet.

Flexit UNI 2
Air handling unit with high-efficiency rotary reco-versy system, low-energy fans and control system. Design for flats, small dwellings and passive houses.

Flexit UNI 3
Air handling unit with high-efficiency rotary recovery system, low-energy fans and control system. Designed for small dwellings, single-family houses, small office buildings and passive houses.

Flexit UNI 4
Air handling unit with high-efficiency rotary recovery system, low-energy fans and a new control system. Design for bigger homes, small office buildings and passive houses.

NORSK DESIGNRÅD
NORWEGIAN DESIGN COUNCIL

SINTEF, working together with Flexit, has developed optimal technological solutions with the emphasis on energy efficiency and good indoor environment.

The Norwegian Design Council, working together with Flexit, has conducted user surveys to ensure optimal user friendliness.

Hareide Designmill has assisted Flexit with design development.

Our products are subject to continuous development and we therefore reserve the right to make changes.
We also disclaim liability for any printing errors that may occur.

Art.nr. 111208 web 08/2013

Phone +47 6981 0000
info@flexit.com
www.flexit.com

FLEXIT®
CLEAN AND FRESH AIR